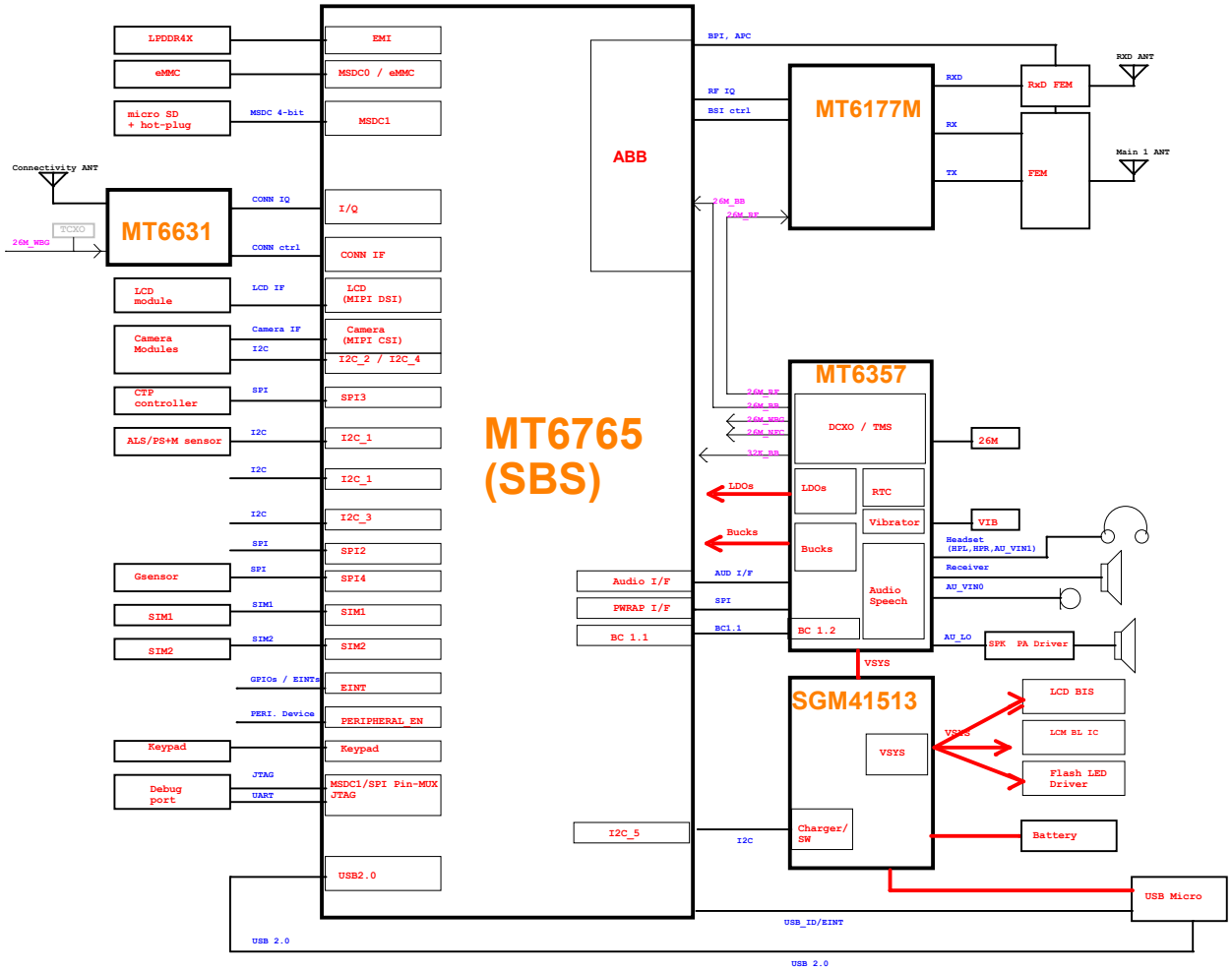

华勤通讯 Huaqin Telecom Technology Com.,Ltd		
Title	02_I2C_ID_Overview	
Size D	Project PA5905_MB_V1	Rev V1
Date: Wednesday, July 27, 2022	Sheet 1 of 37	

I2C	Sub SYS	Function	Part Number	I2C Spec.		i2C Slave Address / Write / Read (7-bit mode)	
I2C-0	AP	Flash LED driver	AW36413			0x6B	
I2C-1 (I3C)	AP Sensor Hub	Magnetic Sensor	AK09918C	400 Kbps		0x0C	Write:0x18 / Read:0x19
		Ambient Light Sensor Proximity Sensor	STK33562	400 Kbps		0x46	Write:0x8C / Read:0x8D
		SAR Sensor	SX9328	400 Kbps		0x28	
I2C-2 (I3C)	AP	Rear Camera					
I2C-3	AP	LCM BIAS	SM5109C			0x3E	Write:0x7C / Read:0x7D
		Audio Smart PA	AW87339				
I2C-4 (I3C)	AP	Front Camera					
I2C-5	AP	Charger IC	BQ25601	400Kbps		0x6B	Write:0xD6 / Read:0xD7
I2C-6	AP	BUCK LP4X					

Note : I2C Spec. : Standard mode (100 kbps) and Fast mode (400 kbps), Fast mode Plus (1 Mbps) and High-speed mode (3.4 Mbps)

华勤通讯 Huaqin Telecom Technology Com.,Ltd		
Title 03_Change_Notice		
Size C	Project PA5905_MB_V1	Rev V1
Date: Wednesday, July 27, 2022	Sheet 3 of 37	

华勤通讯 Huaqin Telecom Technology Com.,Ltd		
Title 04_CHANGELIST		
Size D	Project PA5905_MB_V1	Rev V1
Date: Wednesday, July 27, 2022	Sheet 4 of 37	

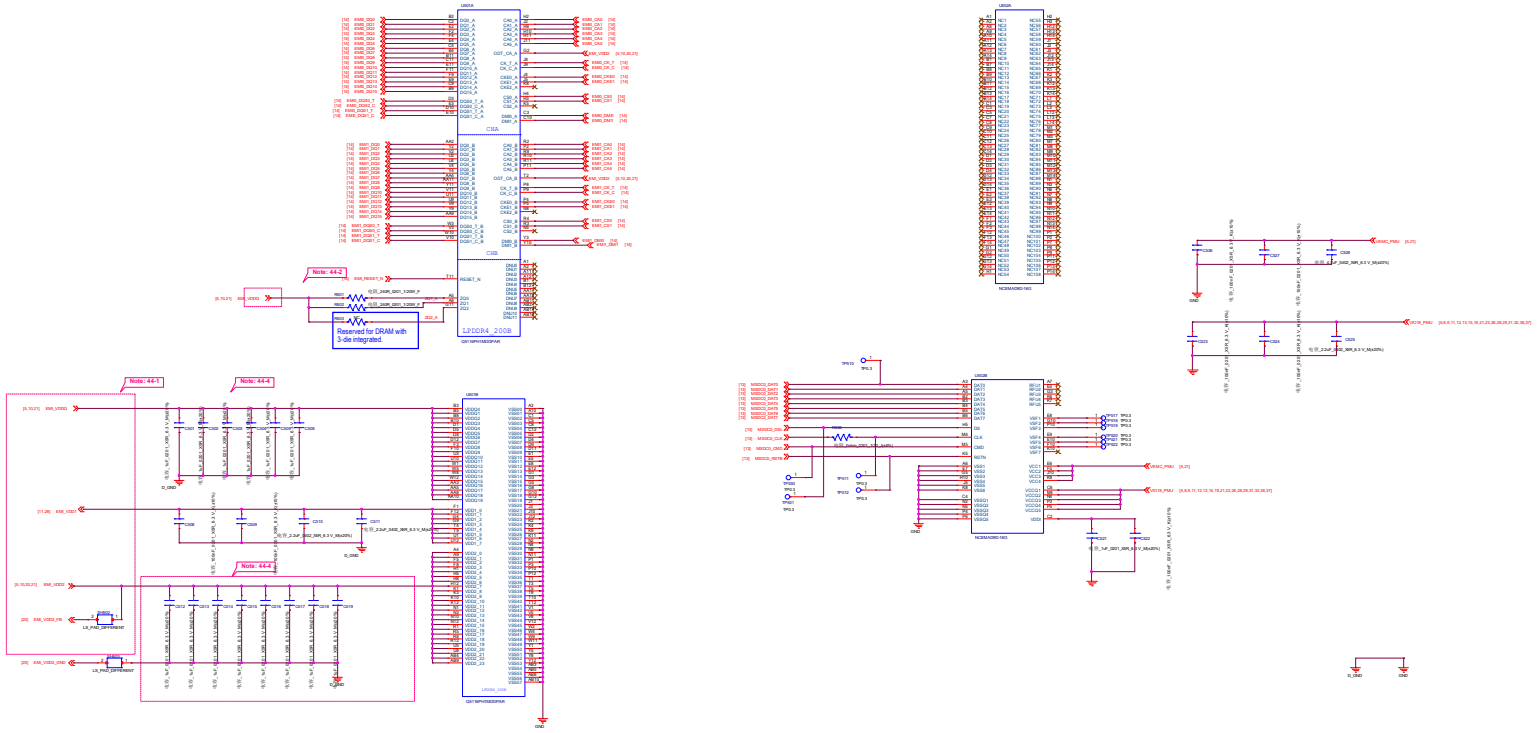

Schematic design notice of "44_Memory_eMMC_LPDDR4"
Note 44-1: Please refer to power supply related page select output voltage properly for LPDDR4
Note 44-2: DRAM ZQx resistor = 240ohm (1%) that must be connected to VDDQ.
Note 44-4: VDD2 VDDQ decoupling cap: closed to DRAM ball. For other cap for PMIC [>10uF, at PMIC page]: please also refer to MMD and layout guide for placement.

华勤通讯 Huaqin Telecom Technology Com.,Ltd		
Title	05_Memory_eMMC_LPDDR4	
Size E	Project PA5905_MB_V1	Rev V1
Date: Wednesday, July 27, 2022	Sheet 5 of 37	

SIM/T卡三选三卡座

SD卡

卡座：---惠乐
KCF-A1300015R-0800
KCF-A0311081 5R-0100
KCF-A0399061 5R-0100

两日达：
S186-2B21F13F-1
S186-1B02F13F
S186-1B01F13F

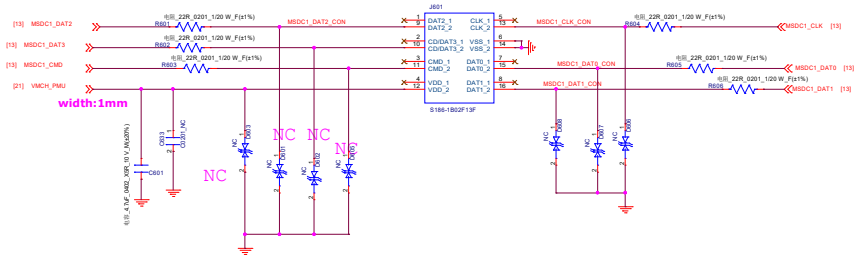

NANO SIM1

R607 NC, if NC is used

DATA参考设计不用上拉到VSIM

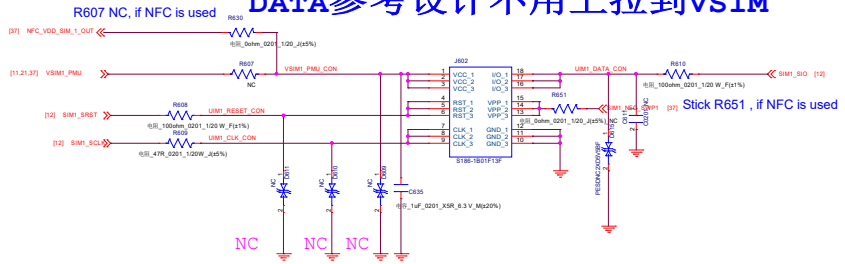

卡座罩子

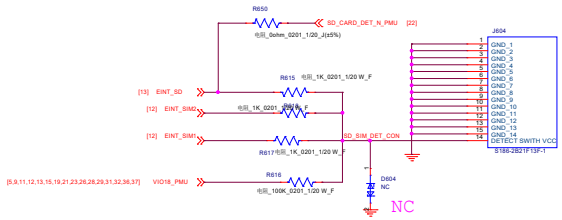

NANO SIM2

DATA参考设计不用上拉到VSIM

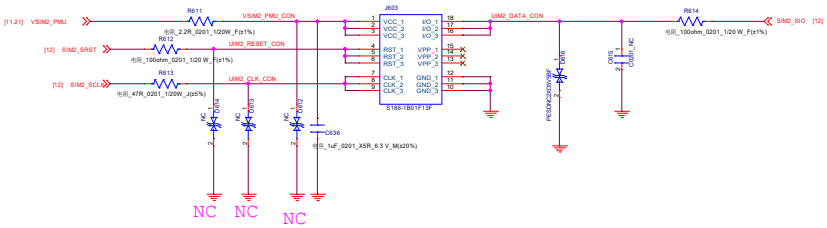

华勤通讯 Huaqin Telecom Technology Com.,Ltd		
Title 06_Memory_SD_SIM_Card		
Size D	Project PA5905_MB_V1	Rev V1
Date: Wednesday, July 27, 2022	Sheet 6 of 37	

Earphone Microphone

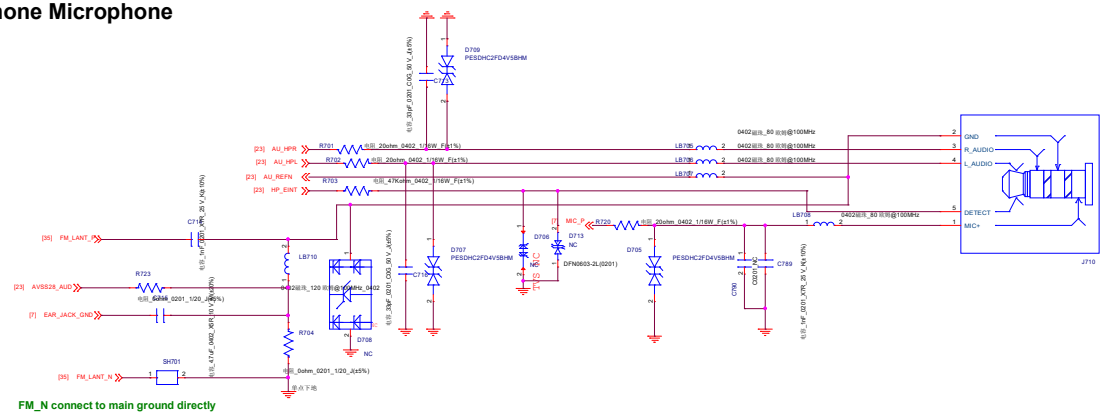

Receiver

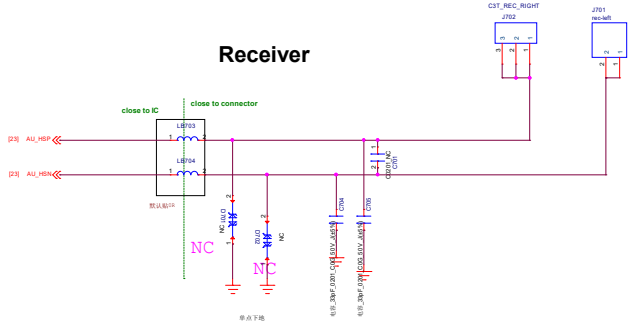

Main MIC

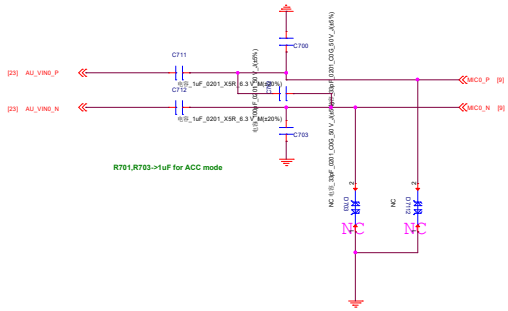

Earphone Microphone

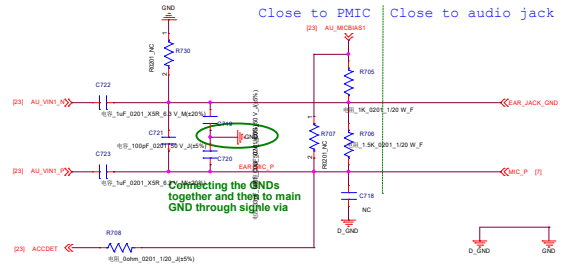

华勤通讯 Huaqin Telecom Technology Com.,Ltd		
Title	07_AUDIO_REC_MAIN_MIC_HEADPHON	
Size D	Project PA5905_MB_V1	Rev V1
Date: Tuesday, August 30, 2022	Sheet 7 of 37	

AUDIO PA FS1512N-M

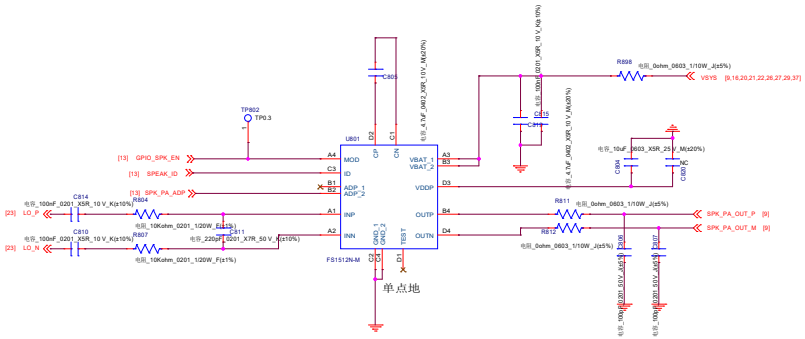

华勤通讯 Huaqin Telecom Technology Com.,Ltd		
Title	08_AUDIO_SPEAKER_AMP	
Size D	Project PA5905_MB_V1	Rev V1
Date: Friday, September 02, 2022	Sheet 8 of 37	

Main LCM+CTP INCELL

60PIN连接器PIN定义

63	Powerpin GND		
61	Powerpin GND	62	Powerpin GND
1	LEDA	60	MIPI_LANE0_P
2	NC	59	MIPI_LANE0_N
3	LCM_LEDK_1	58	GND
4	LCM_LEDK_2	57	MIPI_LANE1_P
5	TE	56	MIPI_LANE1_N
6	LCM_RST	55	GND
7	CABC/PWM	54	MIPI_CLK_P
8	Error_Flag_PIN	53	MIPI_CLK_N
9	EINT_CTP	52	GND
10	SCLK	51	MIPI_LANE2_P
11	MISO	50	MIPI_LANE2_N
12	MOSI	49	GND
13	CS	48	MIPI_LANE3_P
14	GPIO_CTP_RSTB	47	MIPI_LANE3_N
15	LCD_VIO18	46	GND
16	LCM_AVDD	45	LCD_NTC
17	LCM_AVEE	44	GND
18	NC	43	PMA_TUNER_RF1_BES6
19	VIBR_PMU	42	PMA_TUNER_RF1_BES7
20	USB_CC1	41	PMA_TUNER_RF1_BES8
21	GND	40	ANT_CHECK
22	MICBIAS0	39	VIO18
23	MIC+	38	LTE_VFE28
24	MIC-	37	USB_CC2
25	GND	36	GND
26	USB_DM	35	PMA_SAR_SENSOR
27	USB_DP	34	NC/GPSENSOR
28	GND	33	GND
29	SPK+	32	SPK-
30	SPK+	31	SPK-
65	Powerpin VBUS	64	Powerpin VBUS
66	Powerpin VBUS		

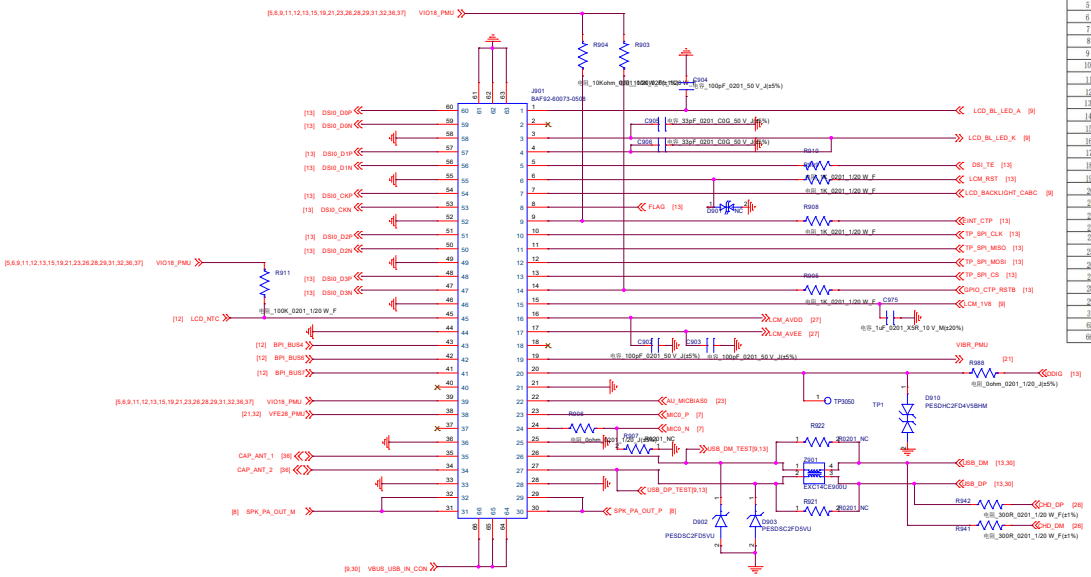

OVP

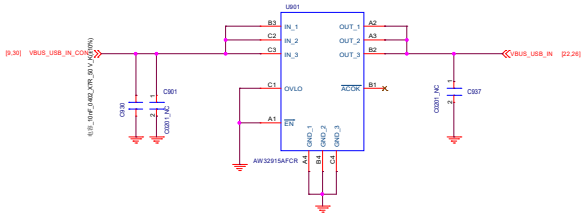

LCD-BACKLIGHT

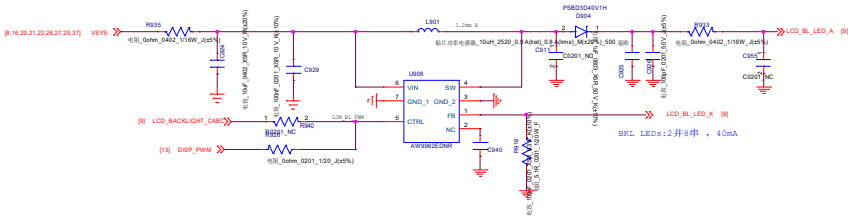

屏 单供1.8v NC

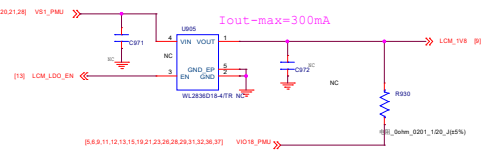

华勤通讯 Huaqin Telecom Technology Com.,Ltd			
Title	09_LCD_CTP_BL		
Size D	Project PA5905_MB_V1		Rev V1
Date: Friday, September 02, 2022		Sheet 9 of 37	

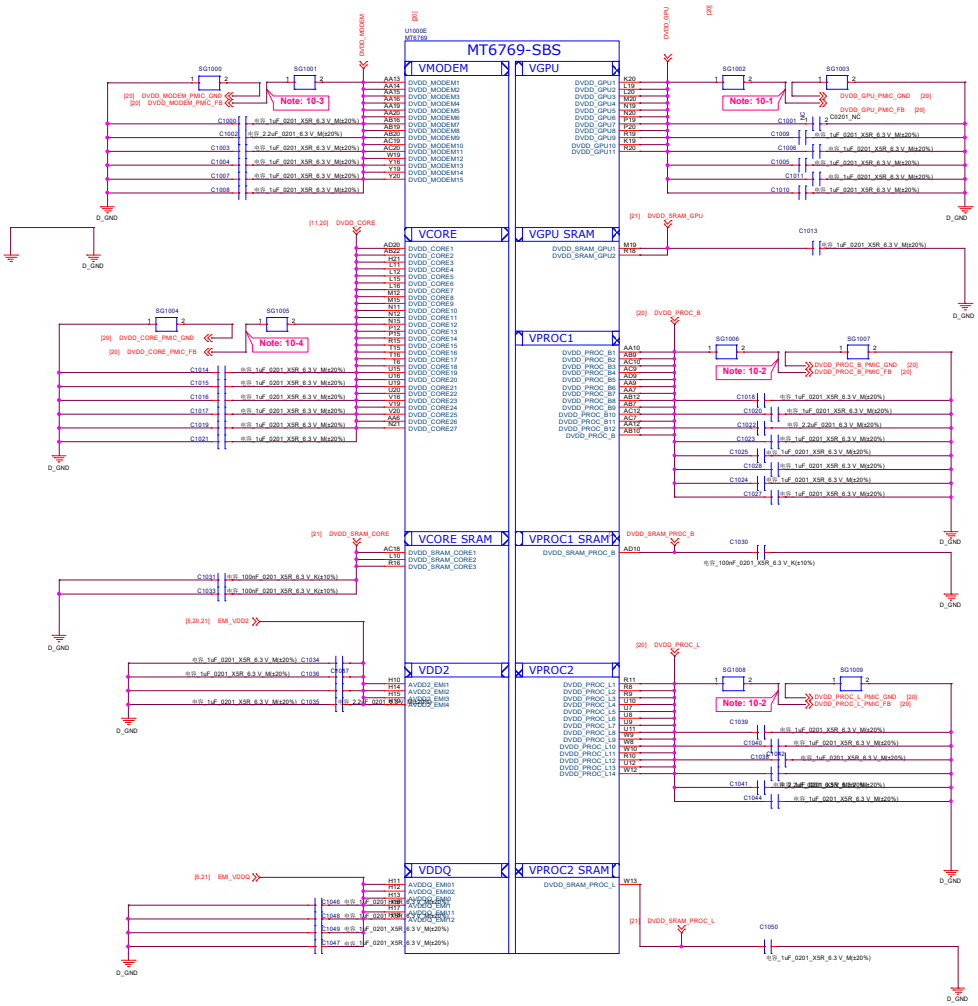

Schematic design notice of "10_BB_ POWER_PDN" page:

Note 10-1:	Differential pair of DVDD_GPU remote sense must be close to BB's ball. Remote sense trace with GND shielding to PMIC (Differential)
Note 10-2:	Differential pair of DVDD_PROC remote sense must be close to BB's ball Remote sense trace with GND shielding to PMIC (Differential)
Note 10-3:	Differential pair of DVDD_MODEM remote sense must be close to BB's ball. Remote sense trace with GND shielding to PMIC (Differential)
Note 10-4:	Differential pair of DVDD_CORE remote sense must be close to BB's ball. Remote sense trace with GND shielding to PMIC (Differential)

华勤通讯 Huaqin Telecom Technology Com.,Ltd		
Title	09_LCD_CTP_BL	
Size D	Project PA5905_MB_V1	Rev V1
Date: Wednesday, July 27, 2022	Sheet 10 of 37	

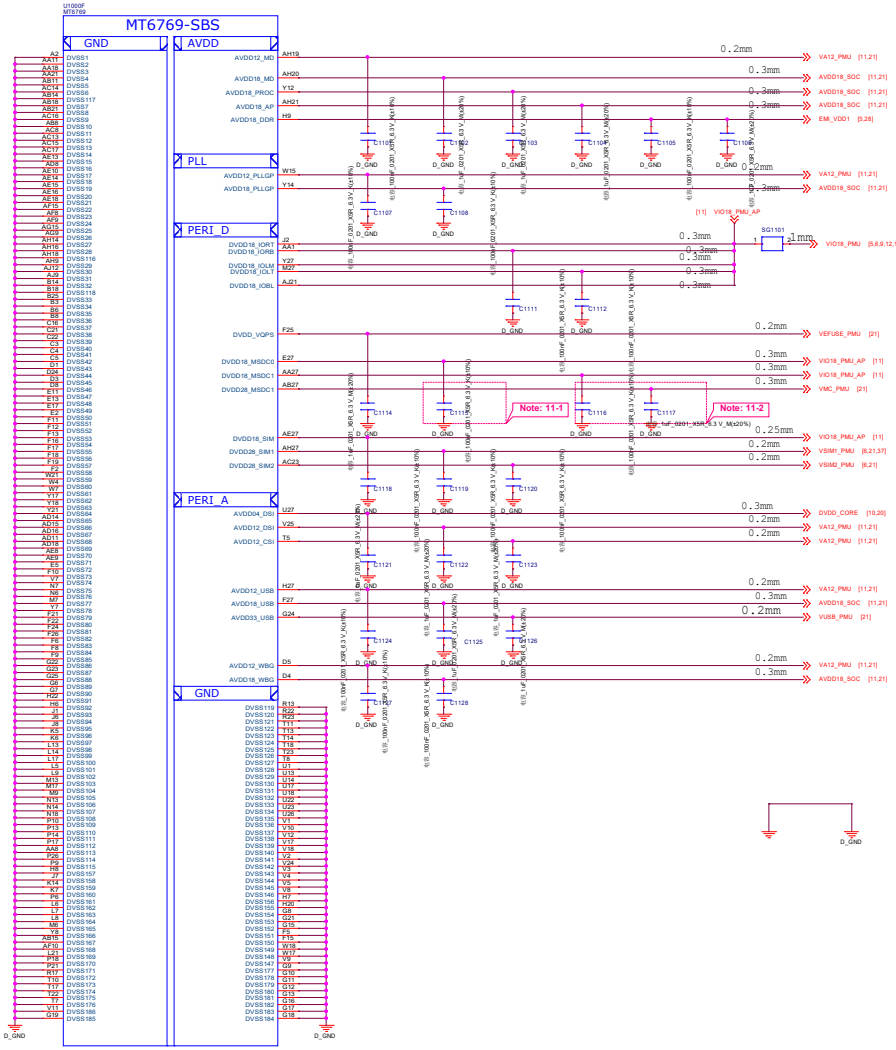

Schematic design notice of "11_BB_POWER_IO" page:

Note 11-1: C1115 closed DVDD18_MSDC0 150mil

Note 11-2: C1116 closed DVDD18_MSDC1 150mil
C1117 closed DVDD28_MSDC1 150mil

AVDD12 :单个点走8mil,两路分支各16mil,总路径20mil

VIO18_PMU_AP:总路径40mil

AVDD18_SOC:总路径20mil

华勤通讯 Huaqin Telecom Technology Com.,Ltd		
Title	09_LCD_CTP_BL	
Size D	Project PA5905_MB_V1	Rev V1
Date: Wednesday, July 27, 2022	Sheet 11 of 37	

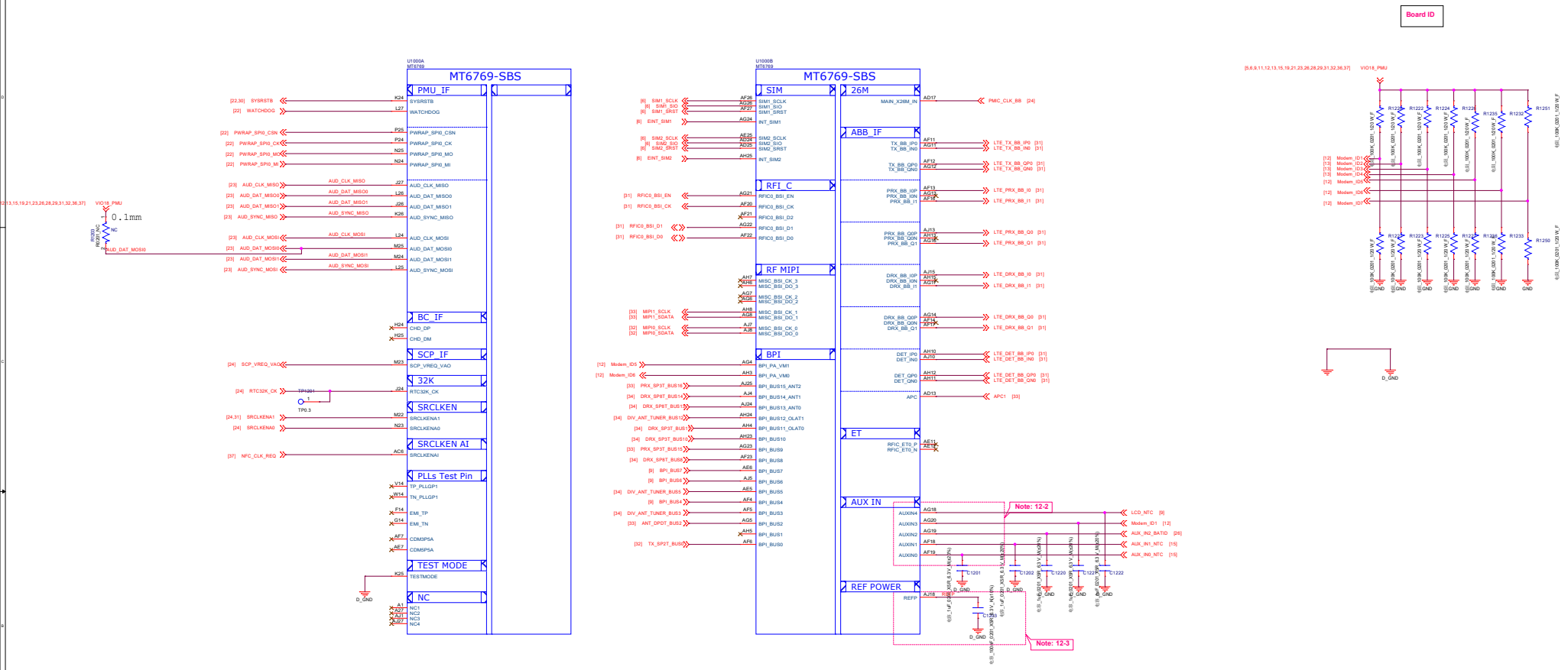

Schematic design notice of "12_BB_1" page:

Note 12-1: PWRAP_SPI0_CSN" and "AUD_DAT_MOSI0" are bootstrap pins to select which interface will be the JTAG pin out

PWRAP_SPI0_CSN	AUD_DAT_MOSI0	JTAG Function	
default=PU	default=PD	AP_JTAG	MD_JTAG
HI	LO	N/A	N/A
HI	HI (by ext. PU)	SPI0 + EINT8	SPI2 + SPI3
LO (by ext. PD)	LO	SPI0 + EINT8	N/A
LO (by ext. PD)	HI (by ext. PU)	N/A	N/A

Note 12-2: To shunt a 1uF capacitor in the AUXIN ADC input to prevent noise coupling. It should be placed as close to BB as possible. Connect the unused AUX ADC input to GND.

Note 12-3: The de-coupling cap. for REFP (AJ18 ball) have to be placed as close to BB as possible.

Note 12-4: HW pin for DDR type feature in bootstrap (refer to BB HW design Notice)

AUD_SYNC_MISO	AUD_CLK_MISO	CAM_PDN3	PMIC 6358 voltage	DDR Type
default=PD	default=PD	default=PD	VDRAM1 / VDRAM2	DDR
No ext. pull	No ext. pull	No ext. pull	1.125v / 0.6v	LP4X eMCP
No ext. pull	12K pull to VIO18	No ext. pull	OFF / 1.8v	Reserved
12K pull to VIO18	No ext. pull	No ext. pull	1.225v / OFF	LP3 eMCP
12K pull to VIO18	12K pull to VIO18	No ext. pull	1.125v / 1.8v	Reserved

Note 12-5: Charger must have D+/D- pin for charger type USB detection.
Charger must have at least 500mA USB current for All charger type.

华勤通讯 Huaqin Telecom Technology Com.,Ltd		
Title	09_LCD_CTP_BL	
Size D	Project PA5905_MB_V1	Rev V1
Date: Wednesday, July 27, 2022	Sheet 12 of 37	

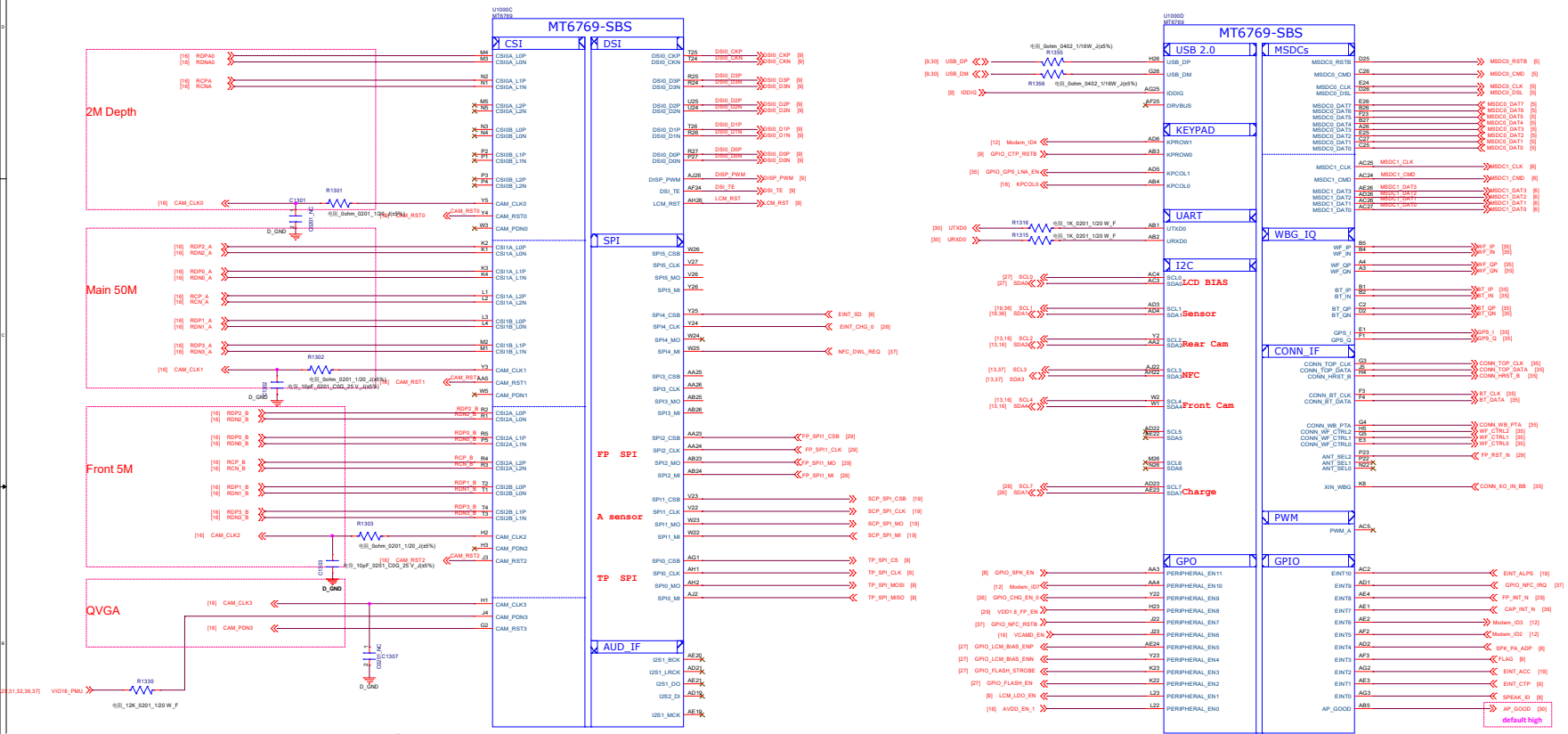

Design Notice: Boot mode

- **MT6768/67 DDR trapping table**

	MT6768 / MT6767			PMIC MT6358	
	AUD_SYNC_MISO (ball : K26)	AUD_CLK_MISO (ball : J27)	CAM_PDN3 (ball : J4)	VDRAM1	VDRAM2
eMCP LP4X (254 b)	No ext. pull	No ext. pull	No ext. pull	1.125V	0.6V
Reserved	No ext. pull	12K to VIO18	No ext. pull	0V	1.8V
eMCP LP3 (221 b)	12K to VIO18	No ext. pull	No ext. pull	1.225V	0V
Reserved	12K to VIO18	12K to VIO18	No ext. pull	1.125V	1.8V
Discrete LP4X (200 b)	No ext. pull	No ext. pull	12K to VIO18	1.125V	0.6V
Reserved	No ext. pull	12K to VIO18	12K to VIO18	0V	1.8V
Reserved	12K to VIO18	No ext. pull	12K to VIO18	1.225V	0V
Reserved	12K to VIO18	12K to VIO18	12K to VIO18	1.125V	1.8V

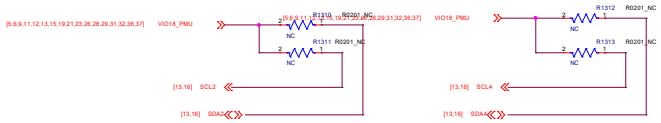

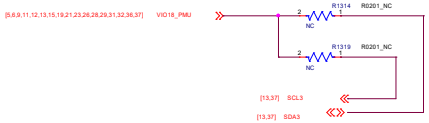

华勤通讯 Huaqin Telecom Technology Com.,Ltd	
Title	09_LCD_CTP_BL
Size D	Project PA5905_MB_V1
Rev V1	
Date: Wednesday, July 27, 2022	Sheet 13 of 37

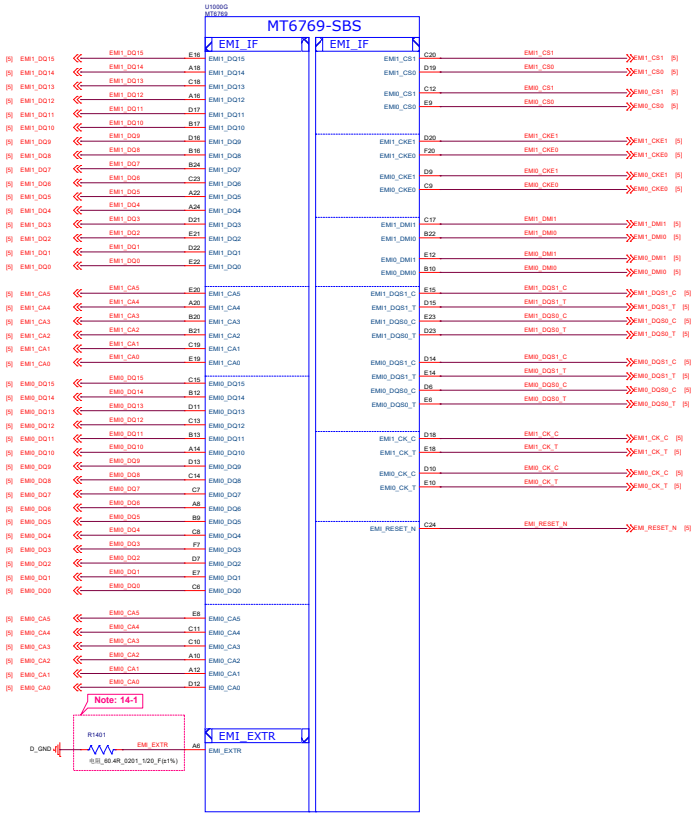

Schematic design notice of "14_BB_3" page.

Note 14-1: R1401 please select 60.4 ohm (1%) resistor

华勤通讯 Huaqin Telecom Technology Com.,Ltd			
Title	09_LCD_CTP_BL		
Size D	Project PA5905_MB_V1		Rev V1
Date: Wednesday, July 27, 2022		Sheet 14 of 37	

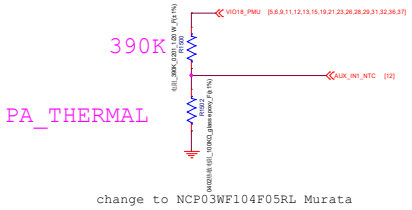

change to NCP03WF104F05RL Murata

Thermistor to sense RF PA temperature

1. NTC1502 must close to LTE Band 7 PA or the hottest PA <2mm.
2. The distance is the shortest distance from package edge to edge.

Thermistor / To sense board level temperature

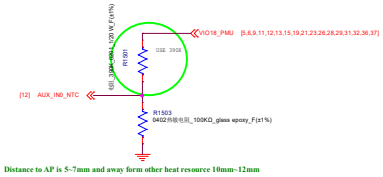

Distance to AP is 5~7mm and away form other heat resource 10mm~12mm

华勤通讯 Huaqin Telecom Technology Com.,Ltd			
Title	15_BB_AUXADC_Thermal		
Size D	Project PA5905_MB_V1		Rev V1
Date: Wednesday, July 27, 2022		Sheet 15 of 37	

Main Rear Camera - 50M

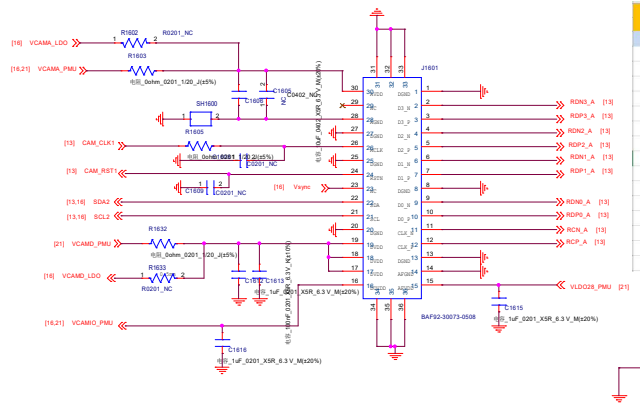

Dphy			
1	DGND	2	AVDD_2.8V
3	D3_N	4	NC
5	D3_P	6	AGND
7	D2_N	8	DGND
9	D2_P	10	MCLK
11	D1_N	12	DGND
13	D1_P	14	RSTN
15	DGND	16	Vsync
17	D0_N	18	SDA
19	D0_P	20	SCL
21	CLK_N	22	DGND
23	CLK_P	24	DVDD
25	DGND	26	DVDD
27	AFGND	28	DVDD
29	AFVDD	30	DOVDD

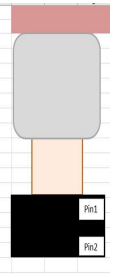

Front Camera 5M/8M

1	DGND	2	AVDD
3	MCN	4	AGND
5	MCP	6	D0_N
7	DGND	8	D0_P
9	NC	10	D1_N
11	NC	12	D1_P
13	DGND	14	DGND
15	NC	16	DVDD
17	NC	18	DOVDD
19	DGND	20	RESET
21	SCL	22	DGND
23	SDA	24	MCLK

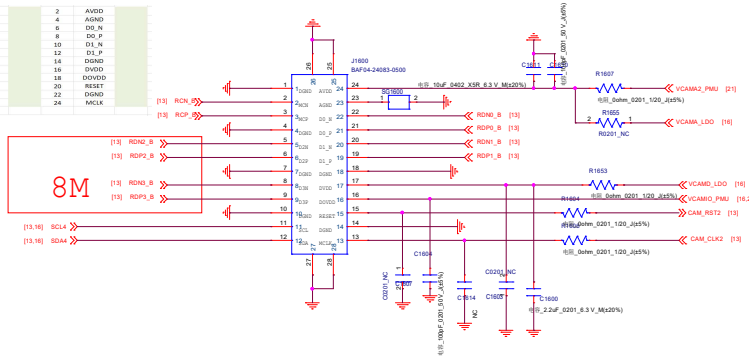

2M（Depth）

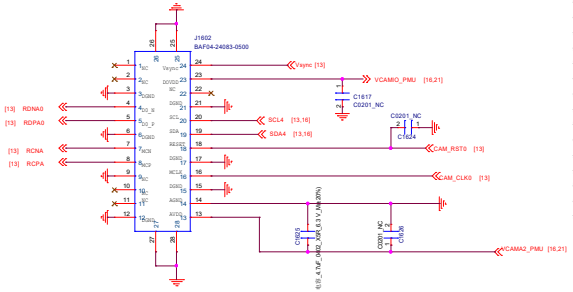

1	NC	2	Vsync
3	NC	4	DOVDD
5	DGND	6	NC
7	D0_N	8	DGND
9	D0_P	10	SCL
11	DGND	12	SDA
13	MCN	14	RESET
15	MCP	16	DGND
17	DGND	18	MCLK
19	NC	20	DGND
21	NC	22	AGND
23	DGND	24	AVDD

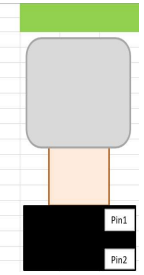

VS1	1.86 ~ 2.2 (12.5mV/step)	2	
VS2	1.25 ~ 1.5 (12.5mV/step)	1.35	

DVDD LDO

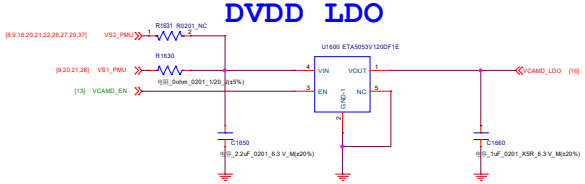

AVDD LDO

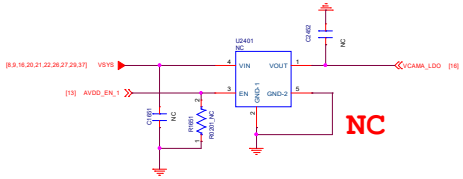

QVGA

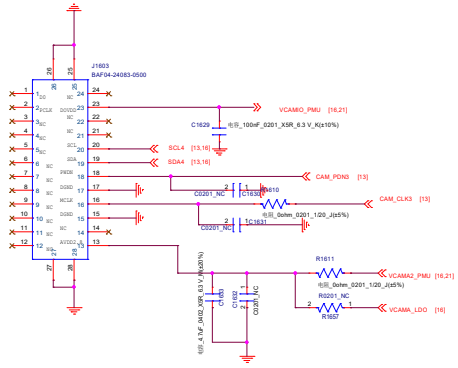

1	D0	2	NC
3	PCLK	4	DOVDD1.8
5	NC	6	NC
7	NC	8	NC
9	NC	10	SCL
11	NC	12	SDA
13	NC	14	PWDN
15	NC	16	DGND
17	NC	18	MCLK
19	NC	20	DGND
21	NC	22	NC
23	NC	24	AVDD2.8

华勤通讯 Huaqin Telecom Technology Com.,Ltd		
Title	16_CAMERA_INTERFACE	
Size D	Project PA5905_MB_V1	Rev V1
Date: Wednesday, July 27, 2022	Sheet 16 of 37	

Power Key / Key Pad

DO NOT put pull-up resistor on PWRKEY

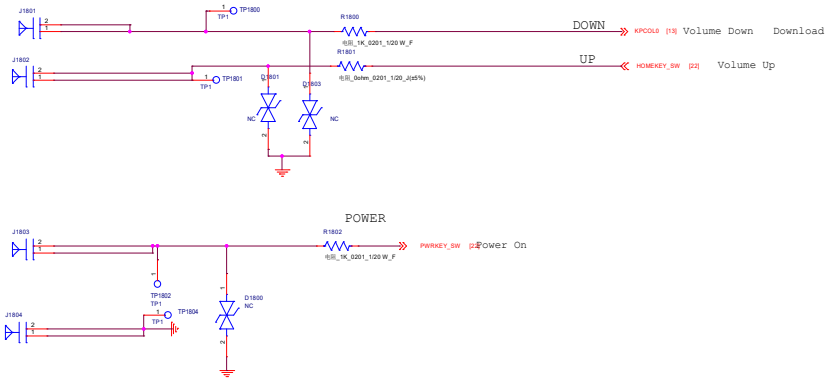

Schematic design notice of "65_PERI_Dual_SIM_ICUSB_KEYPAD" page.	
Note 75-1:	DO NOT put pull-up resistor on PWRKEY
Note 75-2:	Volume Up : HOME Key / GND Volume Down : KPROW0/KPCOL0
Note 75-3:	For better ESD performance, please select suitable components for system protection.

华勤通讯 Huaqin Telecom Technology Com.,Ltd		
Title	18_KEYPAD_INTERFACE	
Size D	Project PA5905_MB_V1	Rev V1
Date: Wednesday, July 27, 2022	Sheet 18 of 37	

A SENSOR

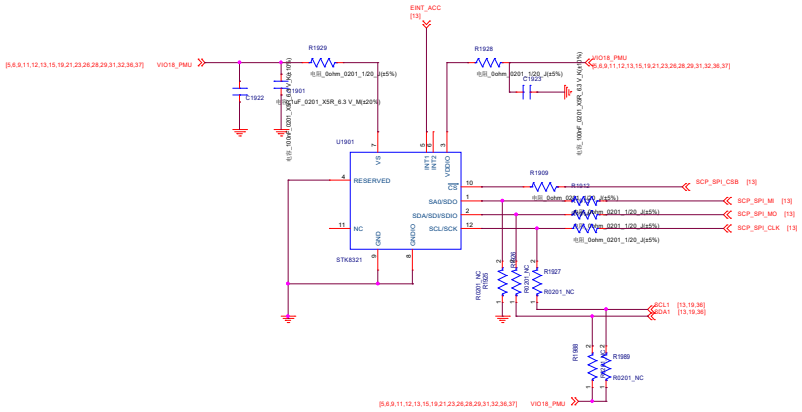

ALS PS 预留 （国内配置贴）

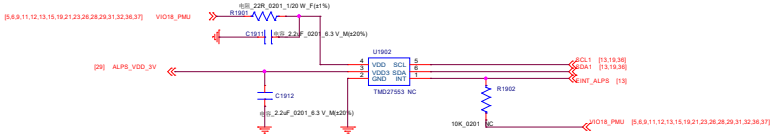

华勤通讯 Huaqin Telecom Technology Com.,Ltd			
Title	19_SENSORS_ALS_PS_A		
Size D	Project PA5905_MB_V1		Rev V1
Date: Wednesday, July 27, 2022		Sheet 19 of 37	

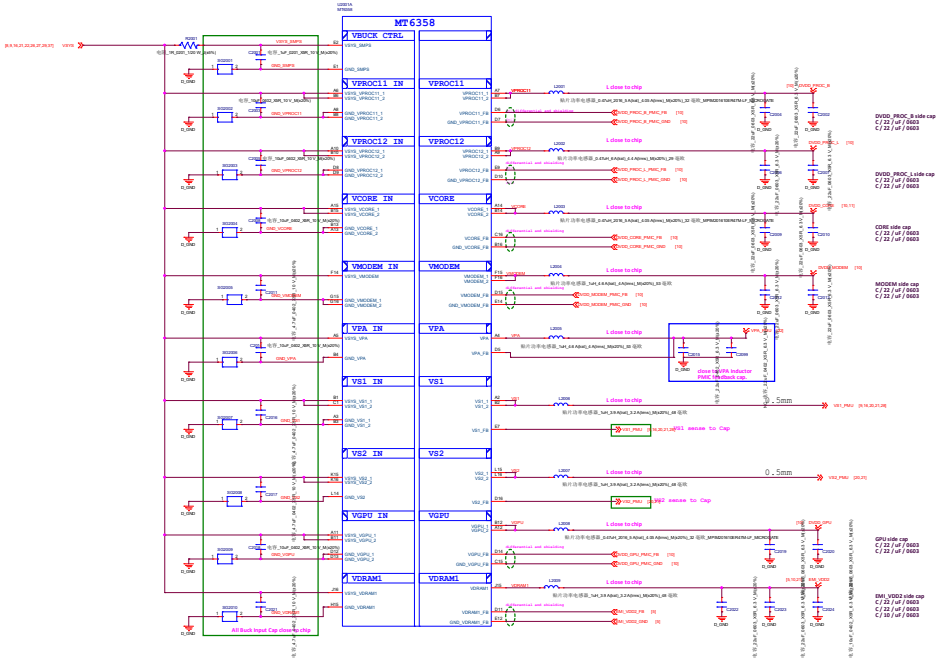

华勤通讯 Huaqin Telecom Technology Com.,Ltd		
Title	09_LCD_CTP_BL	
Size E	Project PA5905_MB_V1	Rev V1
Date: Saturday, September 03, 2022	Sheet 20 of 37	

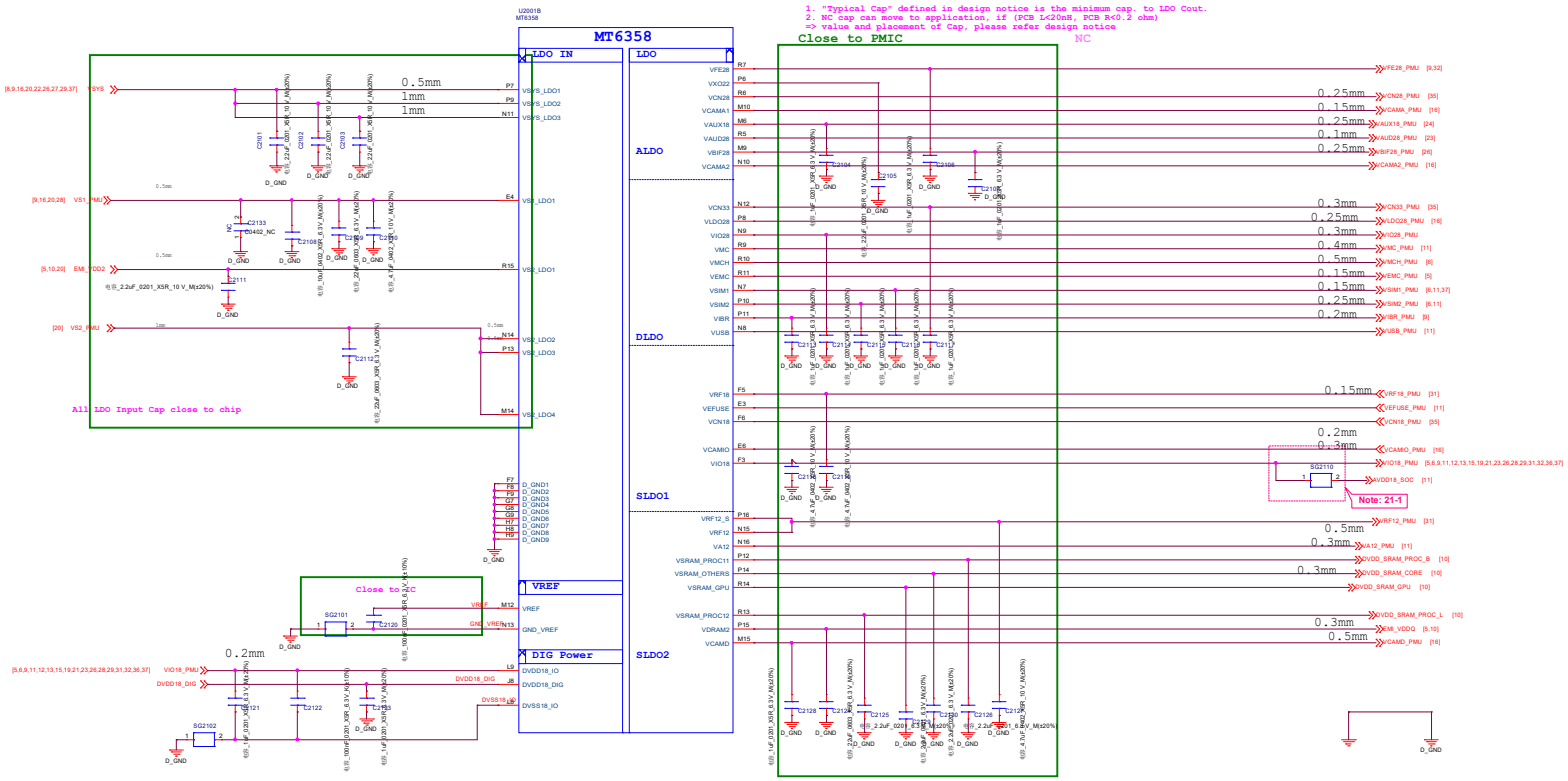

Schematic design notice of "21_POWER_MT6358-LDO" page.

Note 21-1: Please set SG2110 close to C2118, making star connection between VIO18_PMU and AVDD18_SOC near to LDO cap. C2118
Please also refer to MT6358 design notice for further detail design information

Note 21-2: If these power trace can meet LDO layout constraint, these CAP can be NC or removed.
Please refer to MT6358 design notice.

Note: 21-2

华勤通讯 Huaqin Telecom Technology Com.,Ltd		
Title	09_LCD_CTP_BL	
Size D	Project PA5905_MB_V1	Rev V1
Date: Wednesday, July 27, 2022	Sheet 21 of 37	

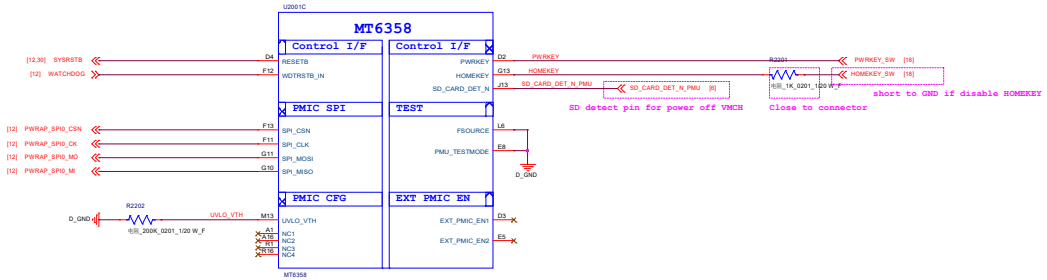

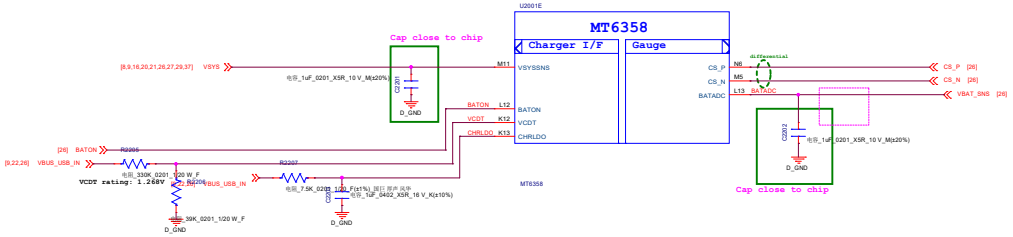

华勤通讯 Huaqin Telecom Technology Com.,Ltd		
Title 09_LCD_CTP_BL		
Size D	Project PA5905_MB_V1	Rev V1
Date: Wednesday, July 27, 2022	Sheet 22 of 37	

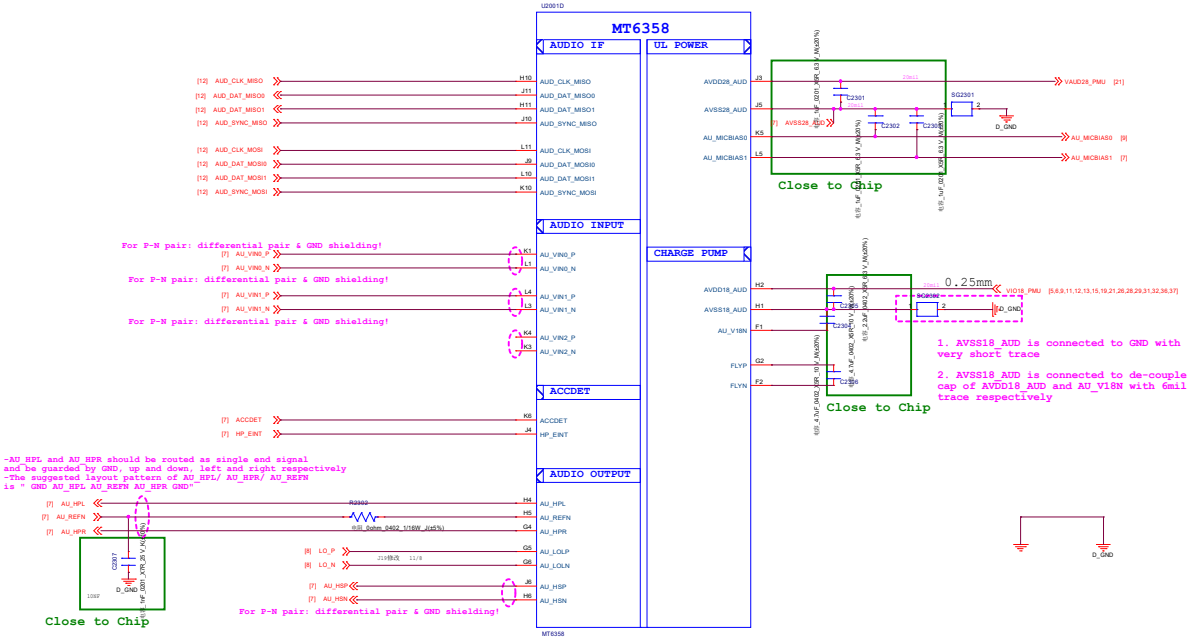

华勤通讯 Huaqin Telecom Technology Com.,Ltd			
Title	09_LCD_CTP_BL		
Size D	Project PA5905_MB_V1		Rev V1
Date: Wednesday, July 27, 2022		Sheet 23 of 37	

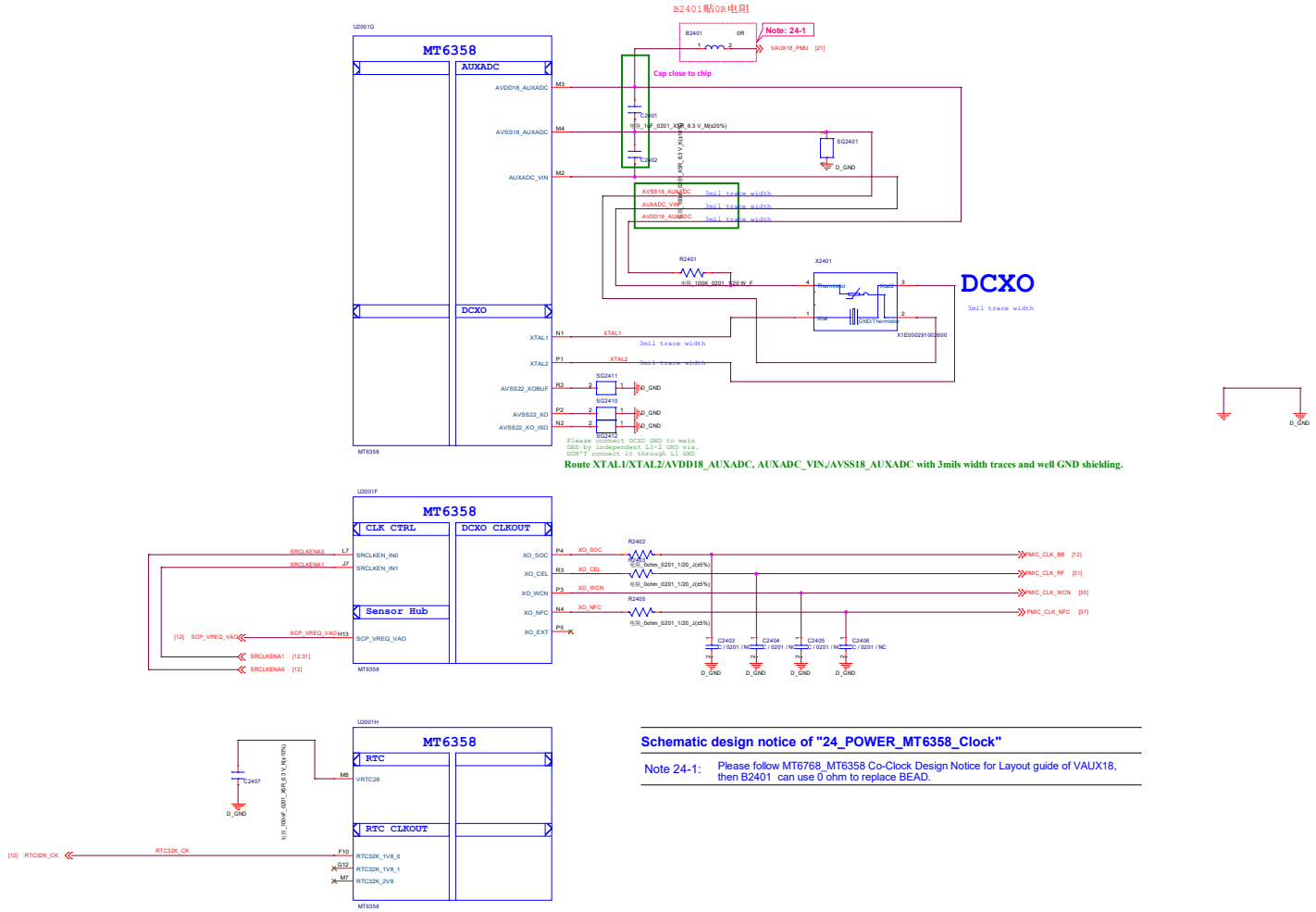

Schematic design notice of "24_POWER_MT6358_Clock"

Note 24-1: Please follow MT6768_MT6358 Co-Clock Design Notice for Layout guide of VAUX18, then B2401 can use 0 ohm to replace BEAD.

华勤通讯 Huaqin Telecom Technology Com.,Ltd		
Title	09_LCD_CTP_BL	
Size D	Project PA5905_MB_V1	Rev V1
Date: Wednesday, July 27, 2022	Sheet 24 of 37	

SGM41513D Charger

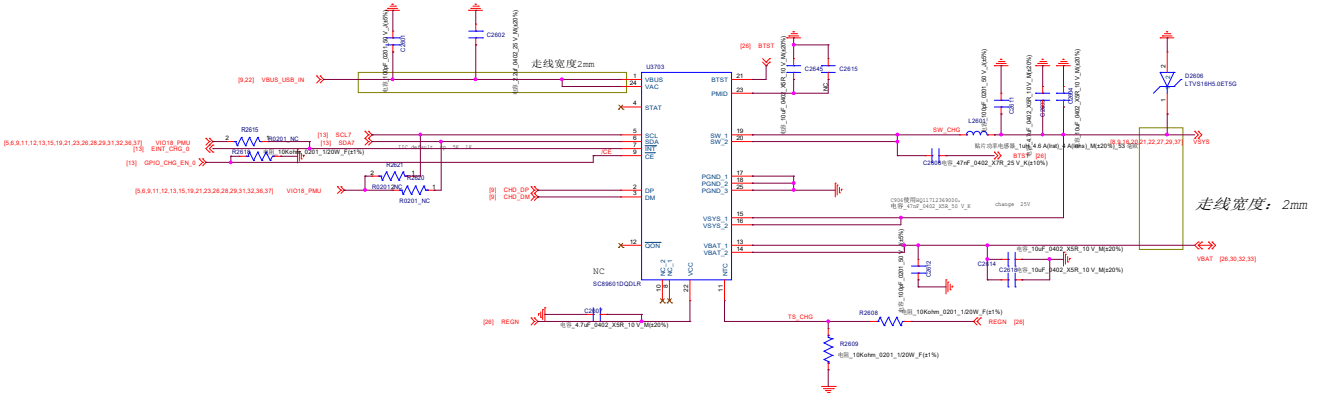

BATTERY CONNECTOR

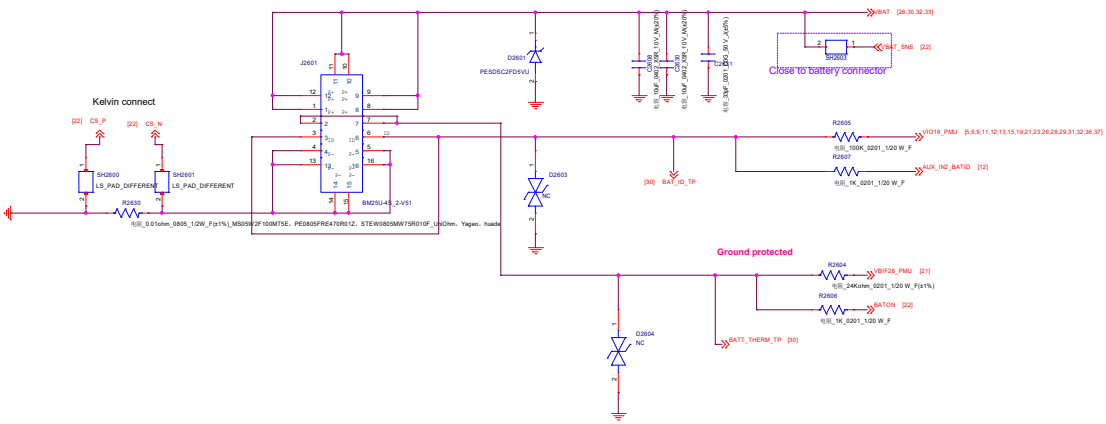

华勤通讯 Huaqin Telecom Technology Com.,Ltd			
Title	26_POWER_SubPMIC-Charger+CONN		
Size D	Project PA5905_MB_V1		Rev V1
Date: Friday, September 02, 2022		Sheet 26 of 37	

Rear Camera Flash

Flash LED for Camera

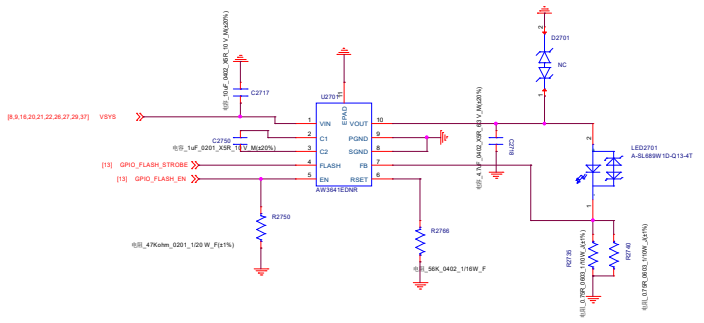

Display BIAS

SM5109C I2C Address : 0x3E Write:0x7C / Read:0x7D

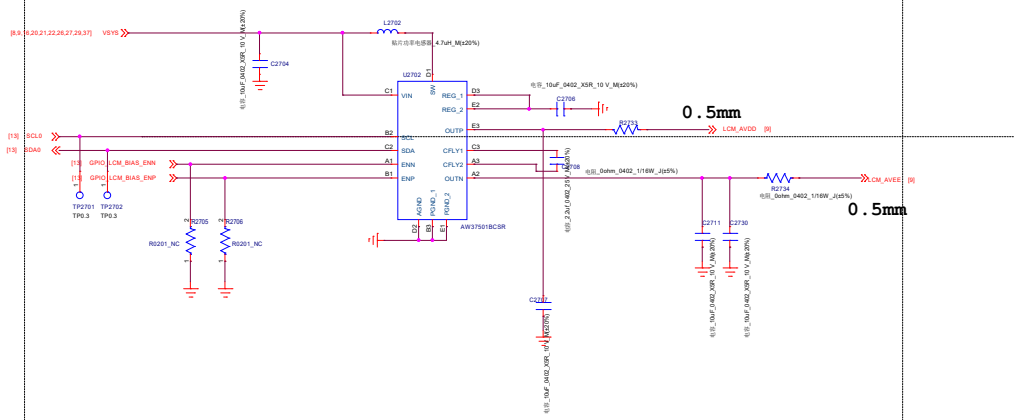

华勤通讯 Huaqin Telecom Technology Com.,Ltd		
Title	27_CAMERA_INTERFACE	
Size D	Project PA5905_MB_V1	Rev V1
Date: Wednesday, July 27, 2022	Sheet 27 of 37	

LPDDR4X VDD1 1.8V LDO

Note: 28-5

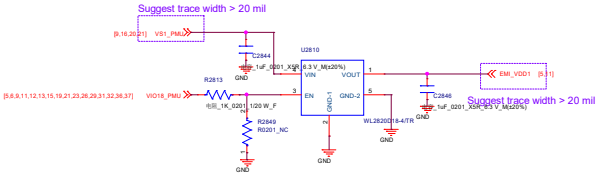

Schematic design notice of "28_POWER_ThirdParty-Power"	
Note 28-1:	VA12 Layout placement please close to AP
Note 28-2:	VS2 Buck Layout placement please close to PMIC MT6357
Note 28-3:	VCN33 LDO Layout placement please close to MT6631

华勤通讯 Huaqin Telecom Technology Com.,Ltd		
Title	28_POWER_ThirdParty_Powers	
Size D	Project PA5905_MB_V1	Rev V1
Date: Wednesday, July 27, 2022	Sheet 28 of 37	

3V LDO Reserve

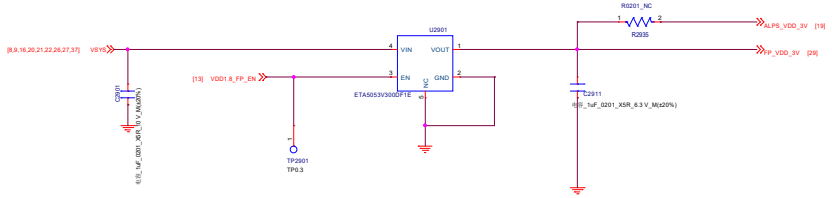

Fingerprint

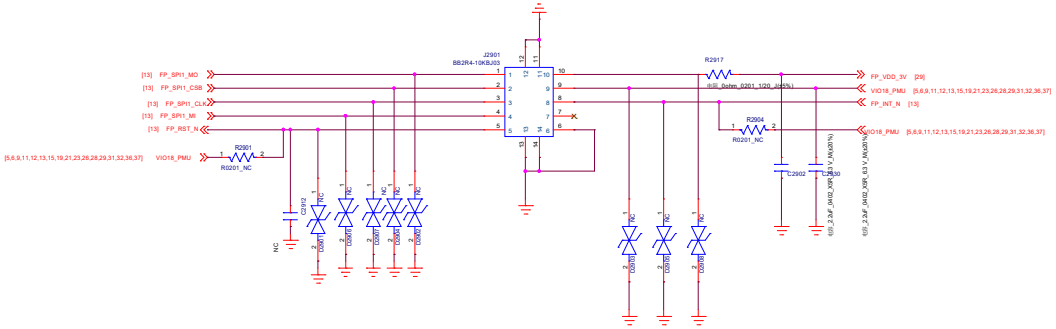

序号	模组 PIN Define
1	MOSI
2	AVDD3.0V(NC)
3	CS
4	DVDD1.8V
5	CLK
6	INT
7	MISO
8	OTP(NC)
9	RST
10	GND

华勤通讯 Huaqin Telecom Technology Com.,Ltd		
Title	29_ Fingerprint	
Size D	Project PA5905_MB_V1	Rev V1
Date: Wednesday, July 27, 2022	Sheet 29 of 37	

VCHG

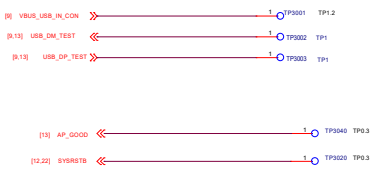

VBAT TEST POINT

UART

RF_PCB TO A-COVER

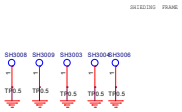

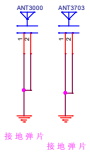

光学定位孔

华勤通讯 Huaqin Telecom Technology Com.,Ltd		
Title 30_DEBUG_IO		
Size D	Project PA5905_MB_V1	Rev V1
Date: Friday, September 02, 2022	Sheet 30 of 37	

PRX/DRX 1-8 For LB/MB:600M-2025M
PRX/DRX 9-12 For HB/MB:1805M-2690M

Power domain of MT6177

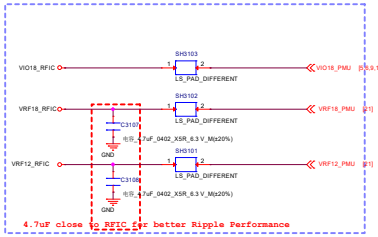

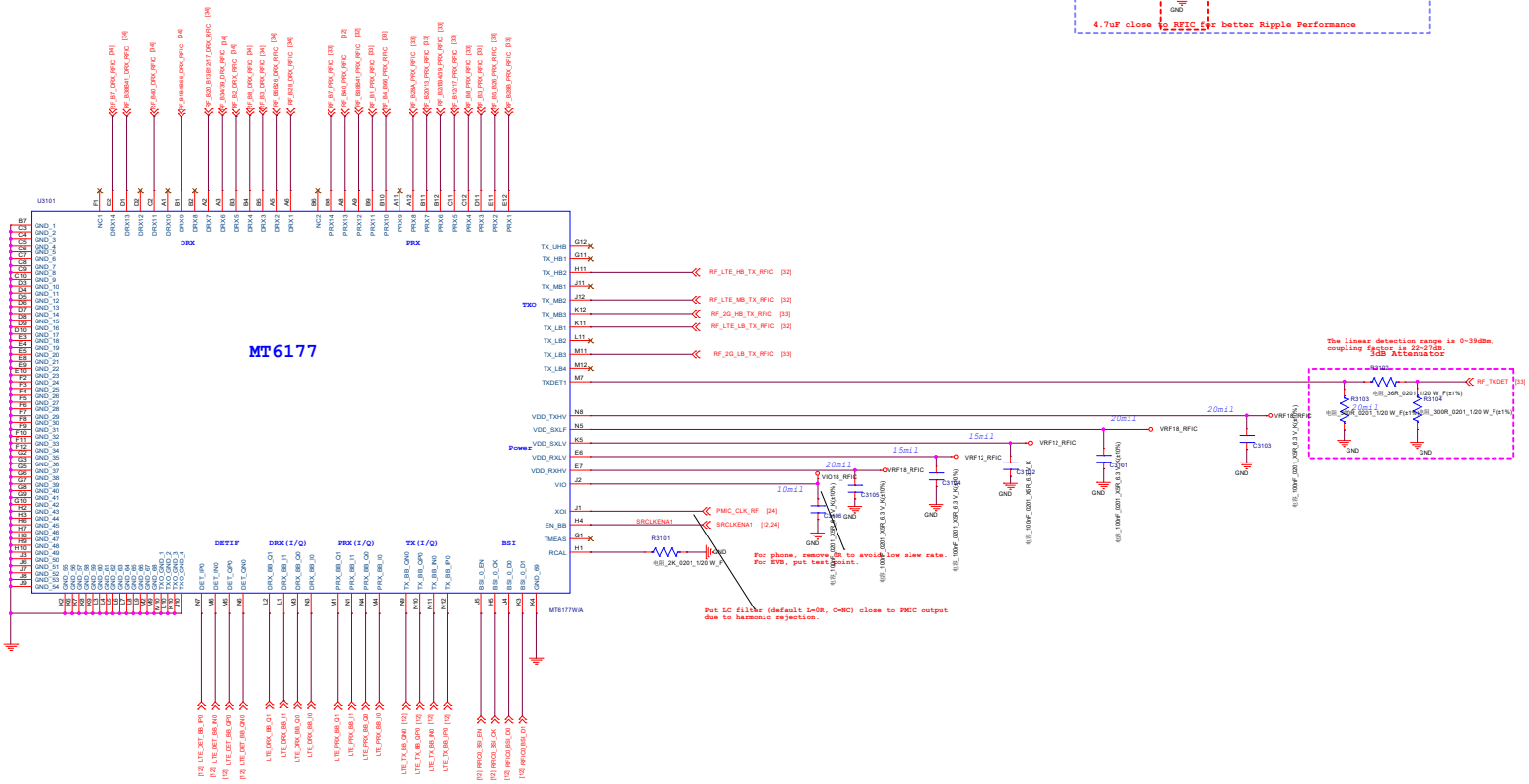

华勤通讯 Huaqin Telecom Technology Com.,Ltd			
Title	31_RF_MT6177_Pin_Out		
Size D	Project PA5905_MB_V1		Rev V1
Date: Sunday, August 14, 2022		Sheet 31 of 36	

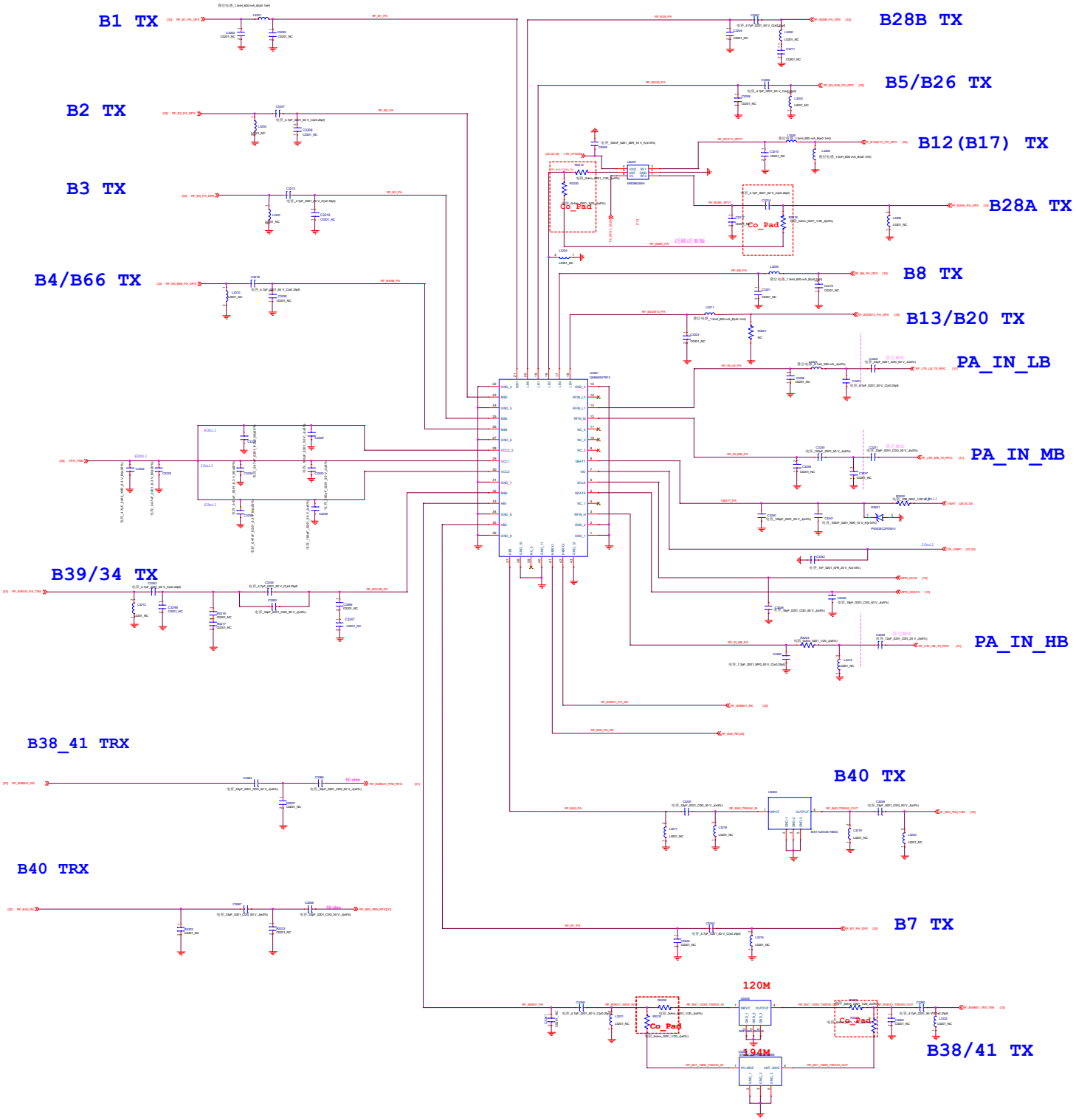

RF Power Supply

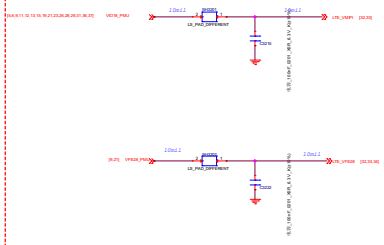

华勤通讯 Huaqin Telecom Technology Com.,Ltd		
Title	32_RF_MT6177_RF_TX	
Size Custom	Project PA5905_MB_V1	Rev V1
Date: Wednesday, July 27, 2022	Sheet 32 of 37	

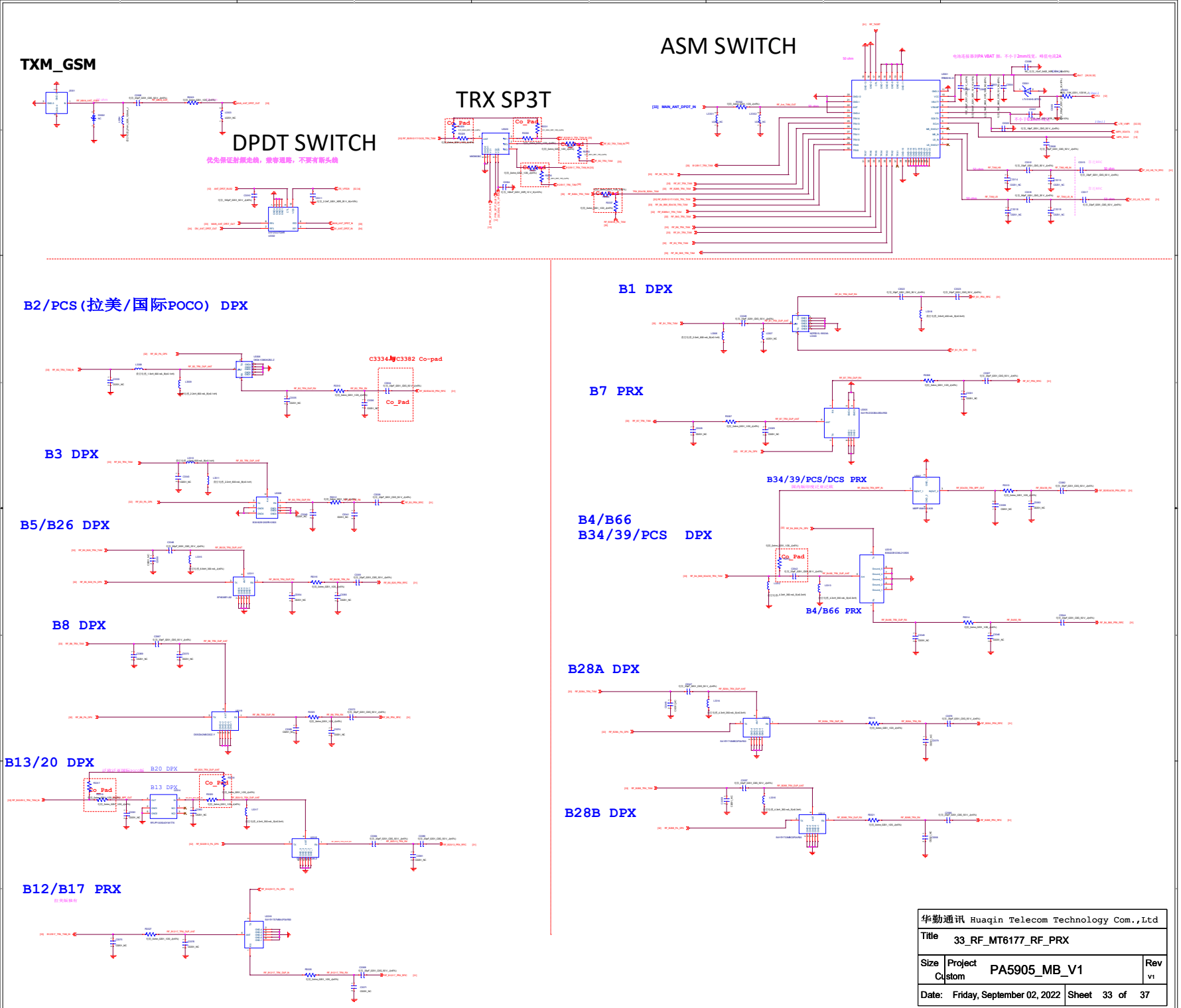

华勤通讯 Huaqin Telecom Technology Com.,Ltd		
Title	33_RF_MT6177_RF_PRX	
Size Custom	Project PA5905_MB_V1	Rev V1
Date: Friday, September 02, 2022	Sheet 33 of 37	

DIV_ANT

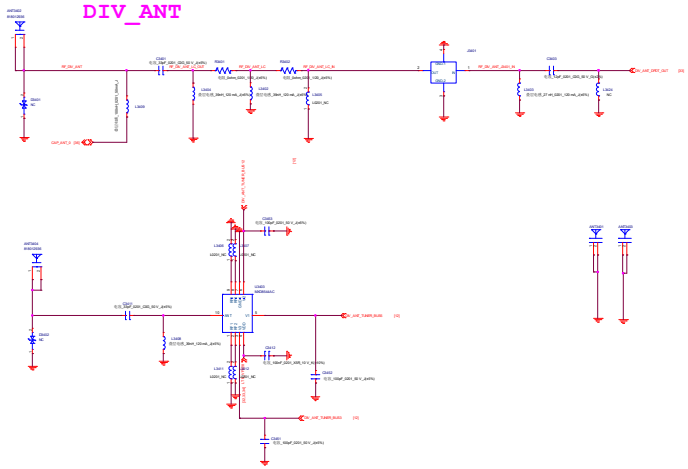

DRX Switch

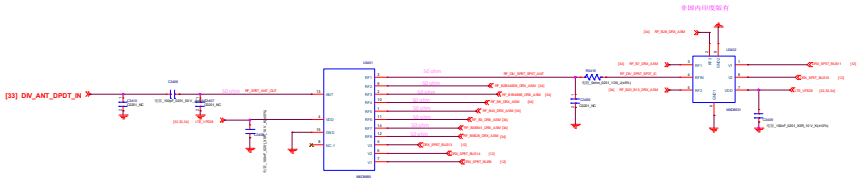

B28 DRX

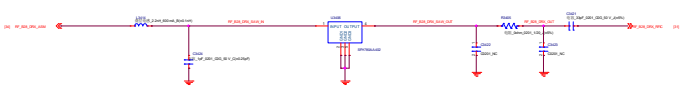

B38/B41 DRX

B5/B26 DRX

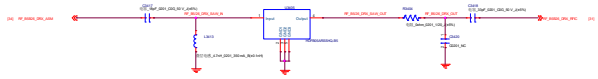

B2(拉美)/B34/B39 DRX

B34/39 DRX

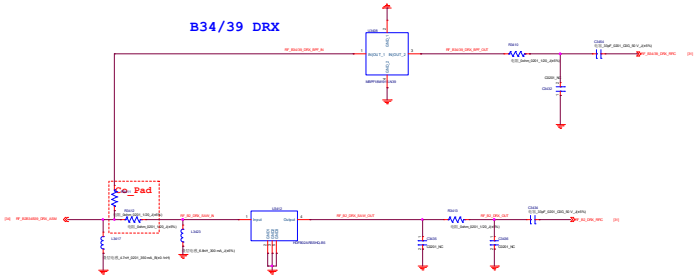

B8 DRX

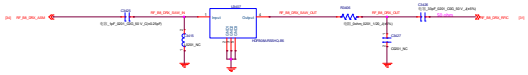

B40 DRX

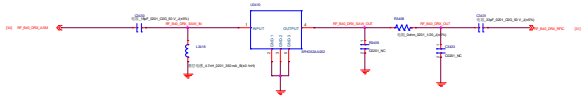

B7 DRX

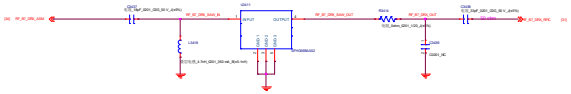

B20/B12(B17)/B13 DRX

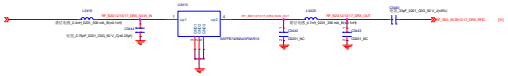

B3 DRX

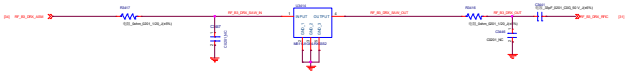

B1/B4/B66 DRX

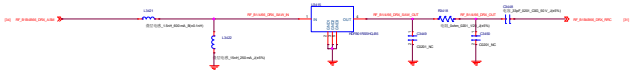

华勤通讯 Huaqin Telecom Technology Com.,Ltd			
Title	34_RF_MT6177_RF_DRX		
Size Custom	Project PA5905_MB_V1		Rev V1
Date: Wednesday, July 27, 2022		Sheet 34 of 37	

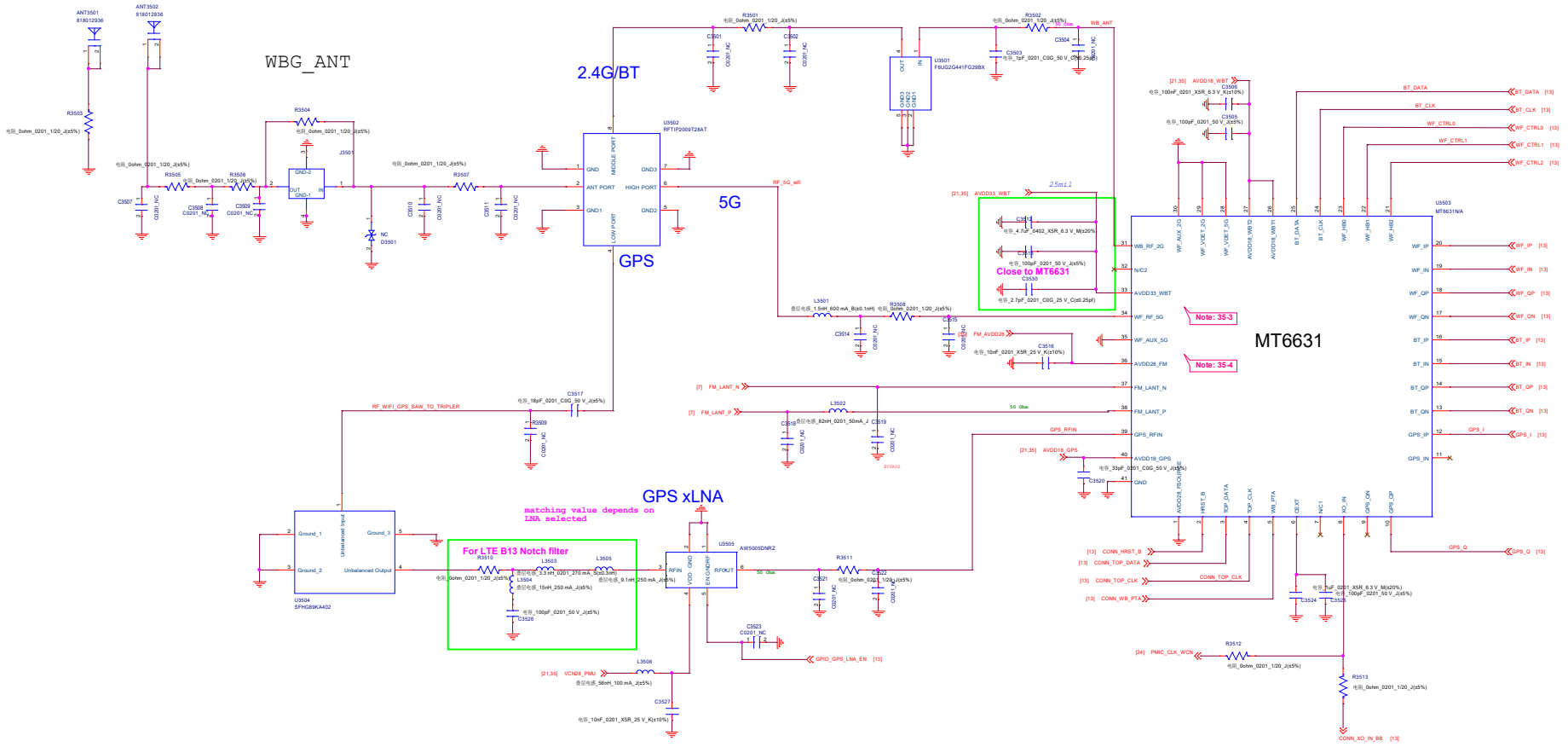

WCN Power Supply

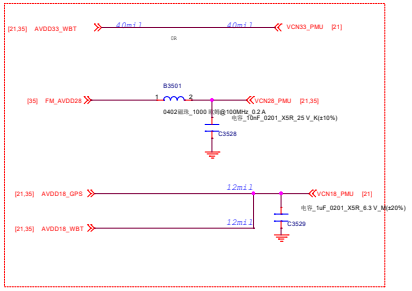

Schematic design notice of "51_CONNECTIVITY_CONSYS_MT6631"	
Note 35-1:	For R5015 size, please select 0402 size or larger one
Note 35-2:	Please refer to MT6765 Baseband design notice for VCN33 LDO selection guide

华勤通讯 Huaqin Telecom Technology Com.,Ltd		
Title	35_CONNECTIVITY_CONSYS_MT6631	
Size D	Project PA5905_MB_V1	Rev V1
Date: Wednesday, July 27, 2022	Sheet 35 of 37	

Cap sensor

Close to 3IN1 ANT

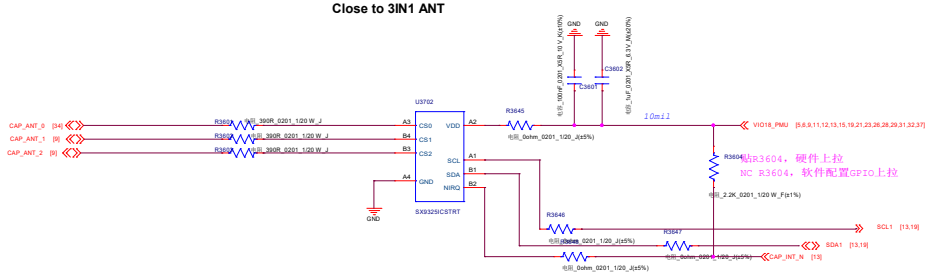

华勤通讯 Huaqin Telecom Technology Com.,Ltd		
Title 36_CAP_Sensor		
Size D	Project PA5905_MB_V1	Rev V1
Date: Wednesday, July 27, 2022	Sheet 36 of 37	

RF_NFC

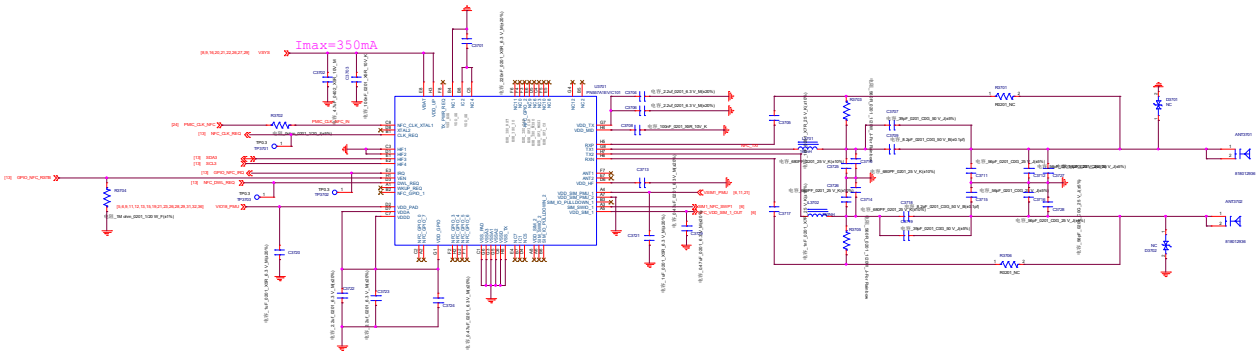

华勤通讯 Huaqin Telecom Technology Com.,Ltd			
Title	37_NFC		
Size E	Project PA5905_MB_V1		Rev V1
Date: Wednesday, July 27, 2022		Sheet 37 of 37	